End Cover

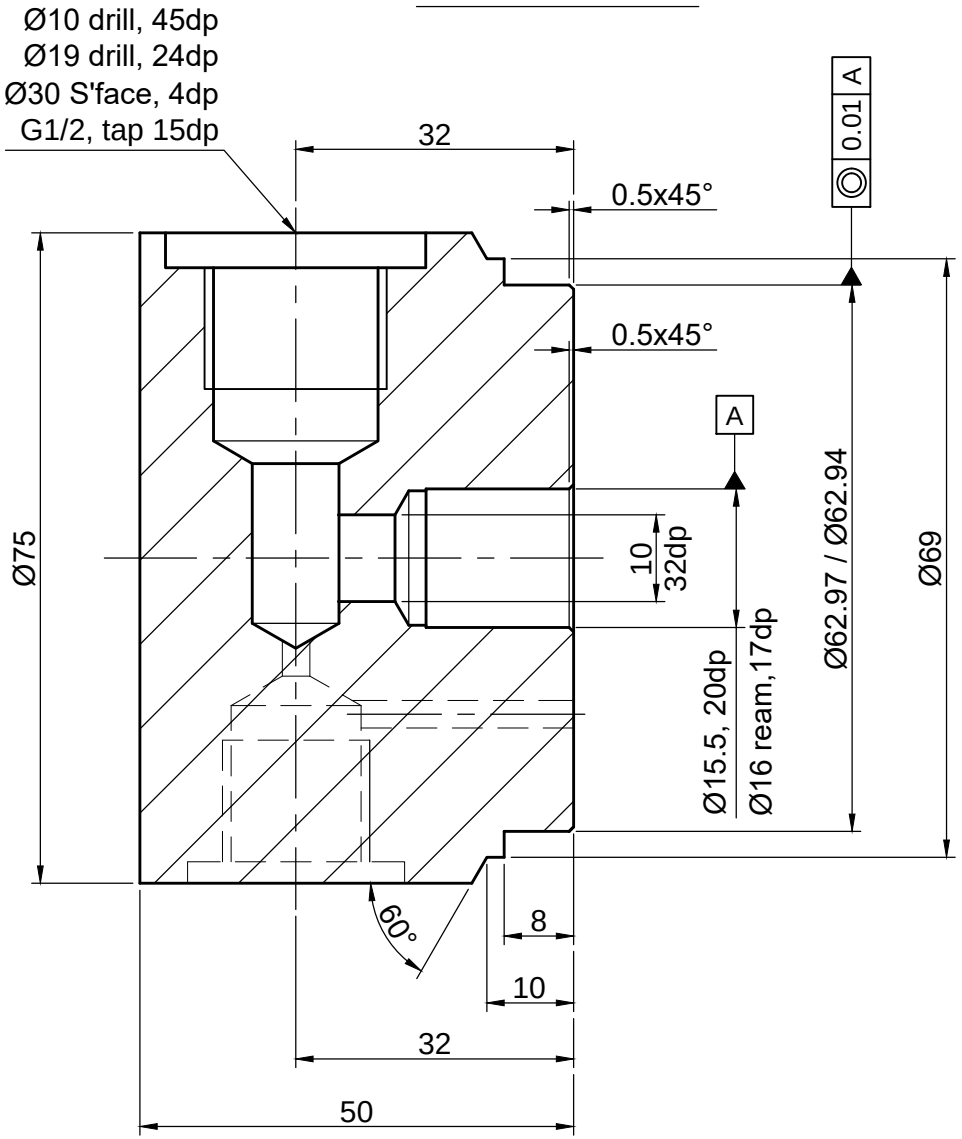

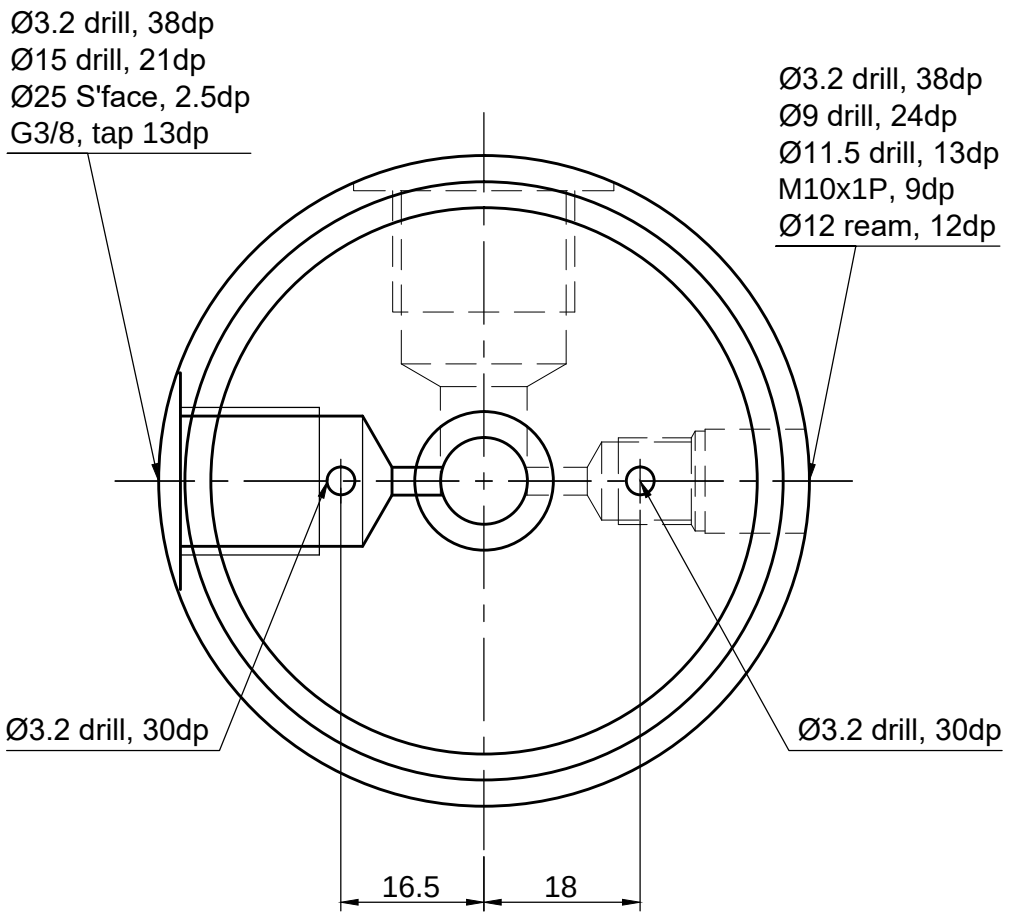

Note:

unspecified chamfers are 0.5x45°.
remove all sharp corners.
All dimensions are in mm.

Material: MS